PROJECT ID. NO.	SHEET NO.
W-5601FB	Sig.M7

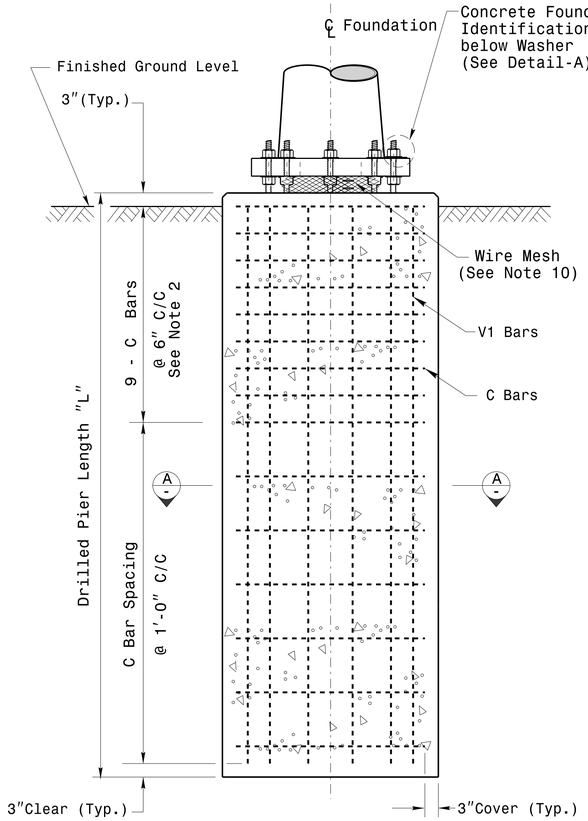

Concrete Shaft Elevation

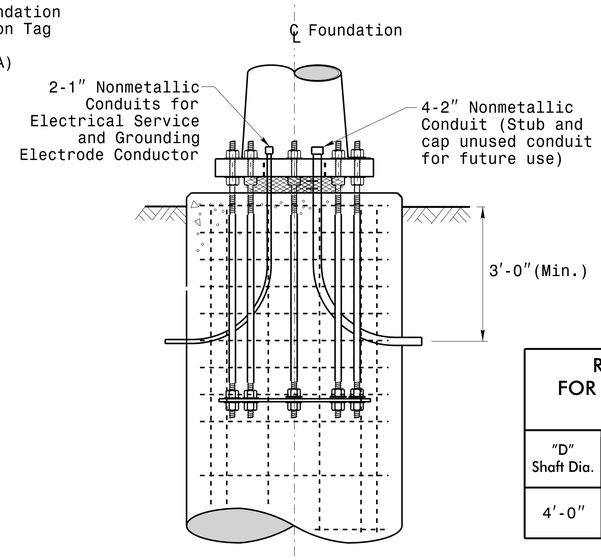

Typical Foundation Conduit Details

REINFORCING STEEL TABLE FOR STANDARD DRILL PIER SHAFT (4'–0" DIAMETER)						
"D" Shaft Dia.	Conc. Volume (cu. yds.)	Bar Name	MIN.	Size	Type	Length
4'-0"	.465 x L	V1	—	#8	STR.	**
		C	*	#4	CIR.	12'-6"

* See Note No. 2
** See Note No. 3

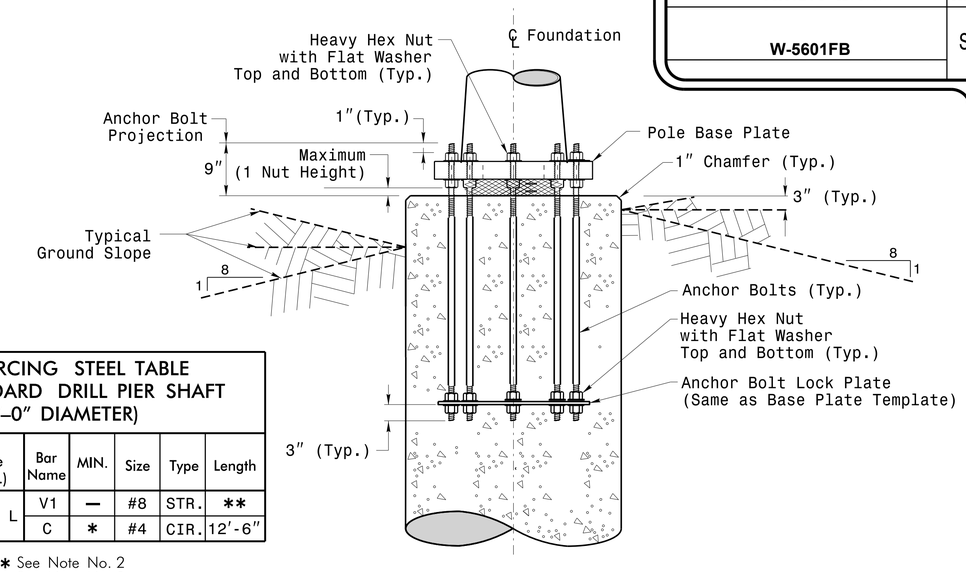

Typical Foundation Anchor Bolt Details

(Reinforcing Cage Not Shown for Clarity)

General Notes:

1. If actual subsurface conditions differ significantly from boring data contact the Engineer before excavating or placing concrete.
2. Circular tie reinforcing rings may be vertically adjusted by +/-3" at a depth between 2'-0" and 3'-0" to facilitate the installation of electrical conduit entering in the cage.
3. For standard foundations, see sheet Sig. M8 for details. Vertical reinforcing bars (V1) may be horizontally adjusted by +/-3" to facilitate the installation of electrical conduit entering into the cage.
4. Provide 2" to 5" foundation projection above ground level depending on the ground slope.
5. Unless otherwise shown, foundation designs are based on non-sloping level ground surfaces with slope ratios of 8:1 (H:V) or flatter. If actual ground line slopes are steeper contact the Engineer before excavating or placing concrete.
6. Construct foundations in accordance with NCDOT Standard Provisions SP09 R005- Foundations and Anchor Rod Assemblies for Metal Poles. All applicable 2012 NCDOT Standard Specifications are referenced in this provision. Refer to the NCDOT Resources/Specifications page located on the Connect NCDOT website.

   https://connect.ncdot.gov/resources/Specifications and Special Provisions.aspx
7. Use air entrained AA concrete mix with a compression strength of f'c=4500 psi.(min.) after 28 days.
8. Use ASTM A615 grade 60 deformed bars for all reinforcing steel. Maintain at least 3" cover on all reinforcement.
9. Locate the Identification Tag on the top of the base plate, directly above the conduit's entry point.
10. Provide two layers of galvanized welded 23 gauge (0.25) 6" wide 4 mesh wire around pipes under the base plate and secure it with ties if necessary.
11. Preferred location for the I.D. Tag is as shown in Detail-A; directly above the conduit entering the foundation.

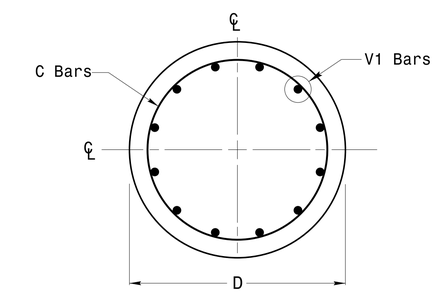

Section A-A

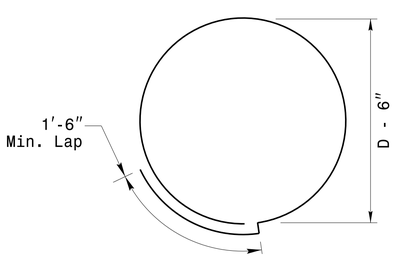

Typical "C" Bar Detail

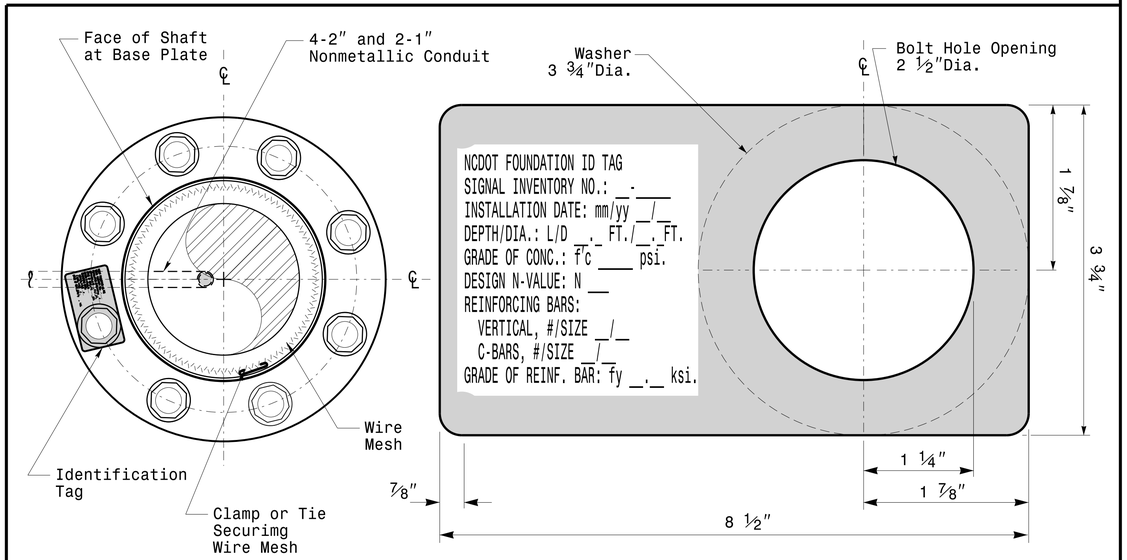

D = Diameter
L = Length/Depth
mm = Month
yy = Year

Detail-A

Concrete Foundation Identification Tag Details

Construction Details – Foundations

Prepared in the Offices of:
Transportation Mobility and Safety Division
Signal Design Section
750 N.Greenfield Pkwy.Garner,NC 27529

SCALE 0 NA NONE

Construction Details For Foundations

PLAN DATE:	FEBRUARY 2016	DESIGNED BY:	C.B.COGDELL
PREPARED BY:	N. BITTING	REVIEWED BY:	D.C. SARKAR

REV. NO.	COMMENTS	INIT.	DATE
1	Revised Foundation Tag Details	N.B.	5/11/2015

SEAL
NORTH CAROLINA PROFESSIONAL SEAL 028094 ENGINEER DEBESH C. SARKAR

DocuSigned by: Debesh C. Sarkar
SIGNATURE 44E8E32E147E4C4...
2/17/2016
DATE

17-FEB-2016 16:10
S:*ITS&SU*ITS Signals*Signal Design Section*Eastern Region*MS Sheets*2016*2014 Sig.M7 Std. Construction Details-Strain Poles.dgn
jpullaway