PROJECT ID. NO.	SHEET NO.
W-5601FB	Sig.M4

Note:
1. Opening in pole base plate shall be equal to pole base inside diameter minus 3½″ but shall not be less than 8½″.

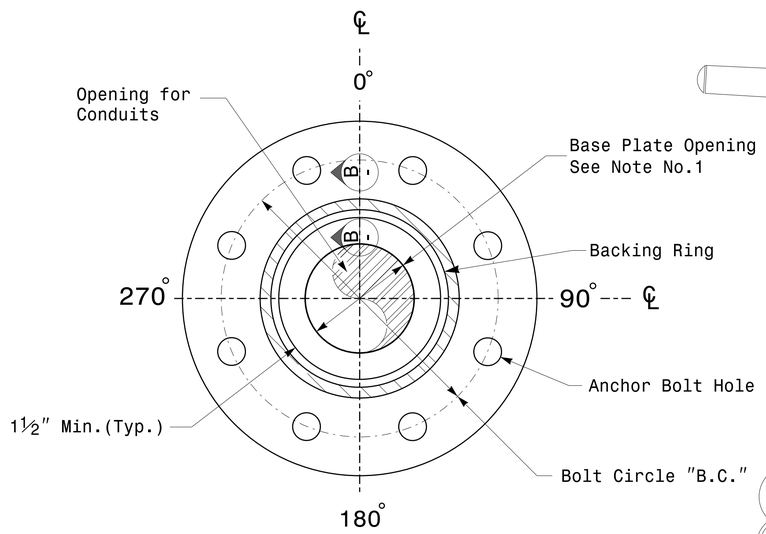

Section A-A

Pole Base Plate Details

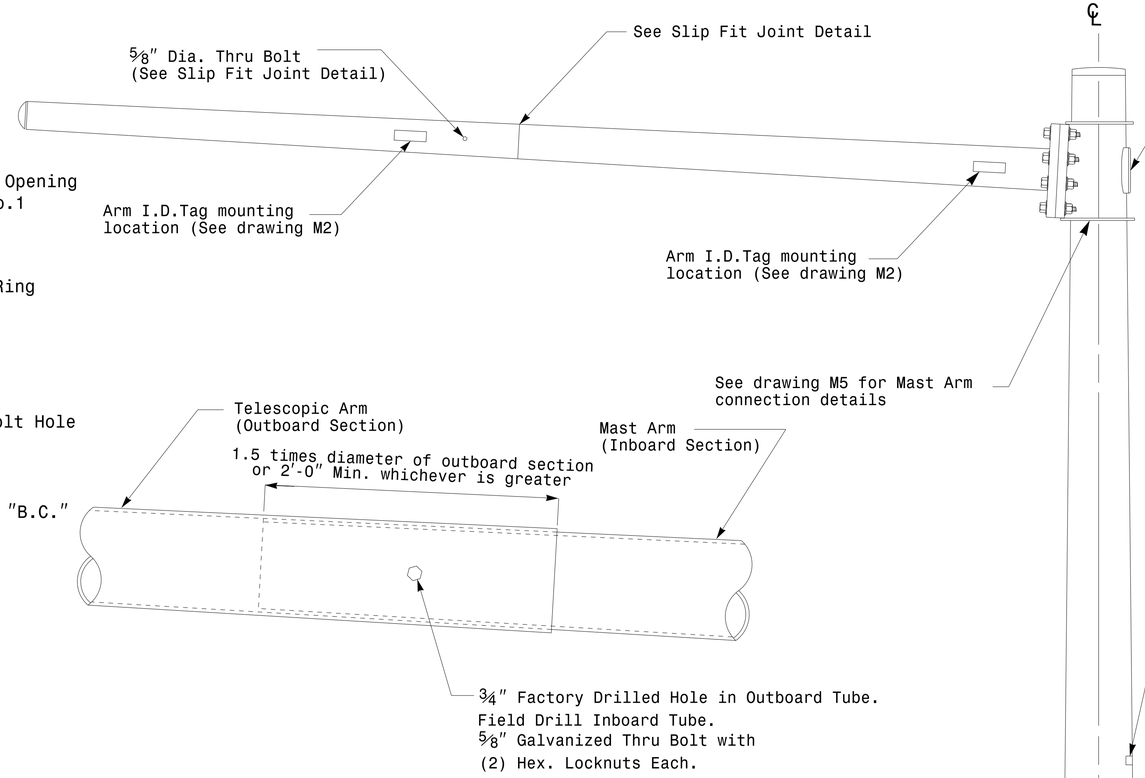

Slip Fit Joint Detail for Mast Arm

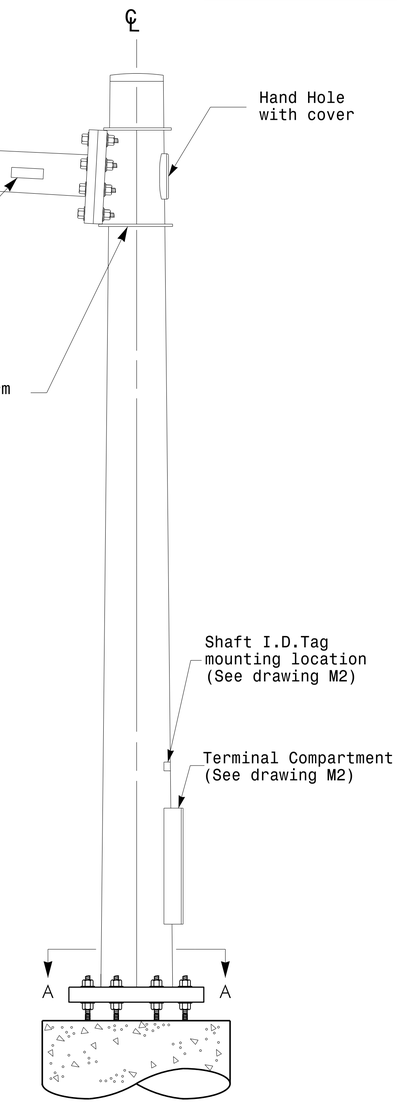

Mast Arm Pole

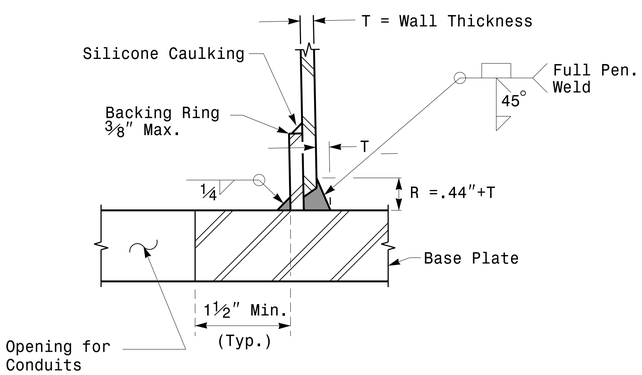

Section B-B
(Pole Attachment to Base Plate)

Full-Penetration Groove Weld Detail

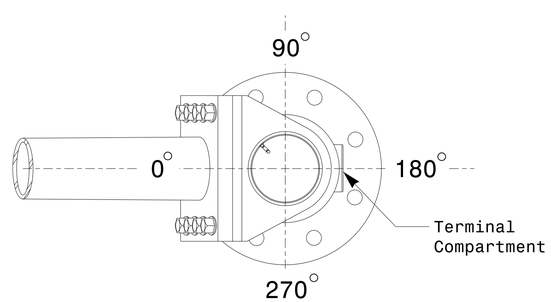

Mast Arm Radial Orientation

Fabrication Details – Mast Arm Poles

Prepared In the Offices of:
Transportation Mobility and Safety Division
Signal Design Section
750 N.Greenfield Pkwy,Garner,NC 27529

SCALE
0 NA
NONE

Typical Fabrication Details
For
Mast Arm Poles

PLAN DATE:	FEBRUARY 2016	DESIGNED BY:	K.C.DURIGON
PREPARED BY:	N. BITTING	REVIEWED BY:	D.C. SARKAR

REVISIONS	INIT.	DATE

SEAL
NORTH CAROLINA PROFESSIONAL SEAL 028094 ENGINEER DEBESH C. SARKAR

DocuSigned by:
Debesh C. Sarkar
SIGNATURE
44E8E32E147E4C4...

2/17/2016
DATE

17-FEB-2016 16:05
S:\MTS&SU\TS Signals\Signal Design Section\Eastern Region\M Sheets\2016\2014 Sig.M4 Std. Fabrication Details-Mast Arm Poles.dgn
jsullivan